SN74ALVCH16374
16-BIT EDGE-TRIGGERED D-TYPE FLIP-FLOP WITH 3-STATE OUTPUTS

SCES021L – JULY 1995 – REVISED SEPTEMBER 2004

FEATURES

- **Member of the Texas Instruments Widebus™ Family**
- **Operates From 1.65 to 3.6 V**
- **Max t_{pd} of 4.2 ns at 3.3 V**
- **±24-mA Output Drive at 3.3 V**
- **Bus Hold on Data Inputs Eliminates the Need for External Pullup/Pulldown Resistors**
- **Latch-Up Performance Exceeds 250 mA Per JESD 17**
- **ESD Protection Exceeds JESD 22**
  - **2000-V Human-Body Model (A114-A)**
  - **200-V Machine Model (A115-A)**

DGG, DGV, OR DL PACKAGE
(TOP VIEW)

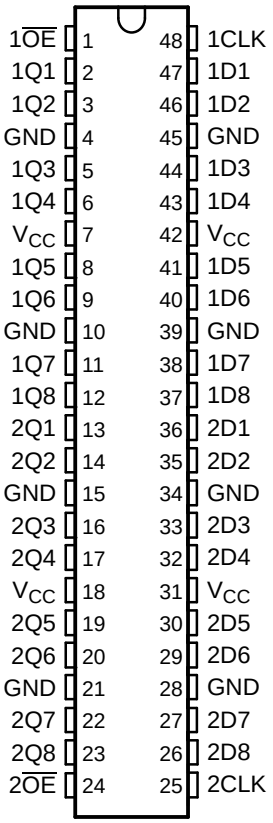

DESCRIPTION/ORDERING INFORMATION

This 16-bit edge-triggered D-type flip-flop is designed for 1.65-V to 3.6-V V_{CC} operation.

The SN74ALVCH16374 is particularly suitable for implementing buffer registers, I/O ports, bidirectional bus drivers, and working registers. It can be used as two 8-bit flip-flops or one 16-bit flip-flop. On the positive transition of the clock (CLK) input, the Q outputs of the flip-flop take on the logic levels at the data (D) inputs. $\overline{OE}$ can be used to place the eight outputs in either a normal logic state (high or low logic levels) or the high-impedance state. In the high-impedance state, the outputs neither load nor drive the bus lines significantly. The high-impedance state and the increased drive provide the capability to drive bus lines without need for interface or pullup components.

$\overline{OE}$ does not affect internal operations of the flip-flop. Old data can be retained or new data can be entered while the outputs are in the high-impedance state.

To ensure the high-impedance state during power up or power down, $\overline{OE}$ should be tied to V_{CC} through a pullup resistor; the minimum value of the resistor is determined by the current-sinking capability of the driver.

Active bus-hold circuitry holds unused or undriven inputs at a valid logic state. Use of pullup or pulldown resistors with the bus-hold circuitry is not recommended.

Please be aware that an important notice concerning availability, standard warranty, and use in critical applications of Texas Instruments semiconductor products and disclaimers thereto appears at the end of this data sheet.

Widebus is a trademark of Texas Instruments.

PRODUCTION DATA information is current as of publication date. Products conform to specifications per the terms of the Texas Instruments standard warranty. Production processing does not necessarily include testing of all parameters.

Copyright © 1995–2004, Texas Instruments Incorporated

ORDERING INFORMATION

T_A	PACKAGE(1)		ORDERABLE PART NUMBER	TOP-SIDE MARKING
-40°C to 85°C	SSOP - DL	Tube	SN74ALVCH16374DL	ALVCH16374
		Tape and reel	SN74ALVCH16374DLR	
	TSSOP - DGG	Tape and reel	SN74ALVCH16374DGGR	ALVCH16374
	TVSOP - DGV	Tape and reel	SN74ALVCH16374DGVR	VH374
	VFBGA - GQL	Tape and reel	SN74ALVCH16374KR	VH374
	VFBGA - ZQL (Pb-free)		74ALVCH16374ZQLR	

(1) Package drawings, standard packing quantities, thermal data, symbolization, and PCB design guideline are available at www.ti.com/sc/package.

GQL OR ZQL PACKAGE
(TOP VIEW)

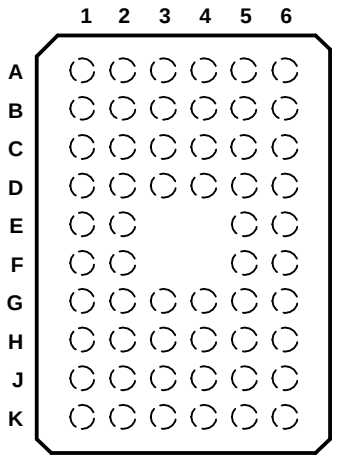

TERMINAL ASSIGNMENTS(1)

	1	2	3	4	5	6
A	$1\overline{OE}$	NC	NC	NC	NC	1CLK
B	1Q2	1Q1	GND	GND	1D1	1D2
C	1Q4	1Q3	V_{CC}	V_{CC}	1D3	1D4
D	1Q6	1Q5	GND	GND	1D5	1D6
E	1Q8	1Q7			1D7	1D8
F	2Q1	2Q2			2D2	2D1
G	2Q3	2Q4	GND	GND	2D4	2D3
H	2Q5	2Q6	V_{CC}	V_{CC}	2D6	2D5
J	2Q7	2Q8	GND	GND	2D8	2D7
K	$2\overline{OE}$	NC	NC	NC	NC	2CLK

(1) NC - No internal connection

FUNCTION TABLE
(each flip-flop)

INPUTS			OUTPUT
$\overline{OE}$	CLK	D	Q
L	↑	H	H
L	↑	L	L
L	H or L	X	Q_0
H	X	X	Z

LOGIC DIAGRAM (POSITIVE LOGIC)

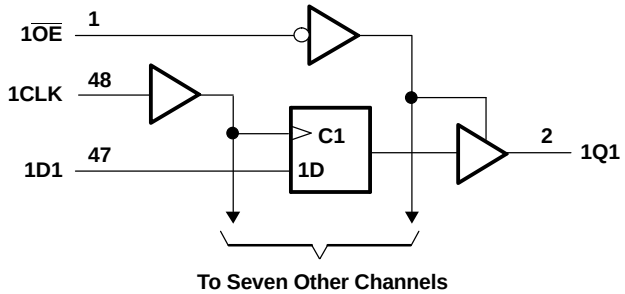

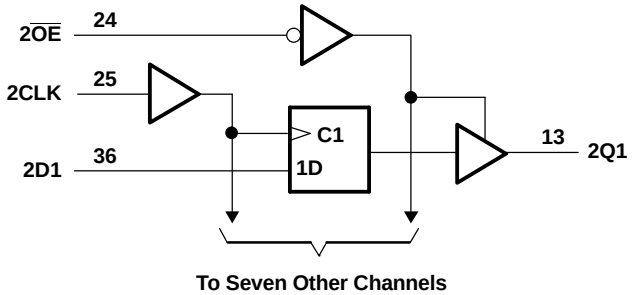

Pin numbers shown are for the DGG, DGV, and DL packages.

ABSOLUTE MAXIMUM RATINGS(1)

over operating free-air temperature range (unless otherwise noted)

			MIN	MAX	UNIT
V_{CC}	Supply voltage range		-0.5	4.6	V
V_I	Input voltage range(2)		-0.5	4.6	V
V_O	Output voltage range(2)(3)		-0.5	V_{CC} + 0.5	V
I_{IK}	Input clamp current	V_I < 0		-50	mA
I_{OK}	Output clamp current	V_O < 0		-50	mA
I_O	Continuous output current			±50	mA
	Continuous current through each V_{CC} or GND			±100	mA
θ_{JA}	Package thermal impedance(4)	DGG package		70	°C/W
		DGV package		58	
		DL package		63	
		GQL/ZQL package		42	
T_{stg}	Storage temperature range		-65	150	°C

(1) Stresses beyond those listed under "absolute maximum ratings" may cause permanent damage to the device. These are stress ratings only, and functional operation of the device at these or any other conditions beyond those indicated under "recommended operating conditions" is not implied. Exposure to absolute-maximum-rated conditions for extended periods may affect device reliability.
(2) The input negative-voltage and output voltage ratings may be exceeded if the input and output current ratings are observed.
(3) This value is limited to 4.6 V, maximum.
(4) The package thermal impedance is calculated in accordance with JESD 51-7.

RECOMMENDED OPERATING CONDITIONS(1)

			MIN	MAX	UNIT
V_{CC}	Supply voltage		1.65	3.6	V
V_{IH}	High-level input voltage	V_{CC} = 1.65 V to 1.95 V	0.65 × V_{CC}		V
		V_{CC} = 2.3 V to 2.7 V	1.7		
		V_{CC} = 2.7 V to 3.6 V	2		
V_{IL}	Low-level input voltage	V_{CC} = 1.65 V to 1.95 V		0.35 × V_{CC}	V
		V_{CC} = 2.3 V to 2.7 V		0.7	
		V_{CC} = 2.7 V to 3.6 V		0.8	
V_I	Input voltage		0	V_{CC}	V
V_O	Output voltage		0	V_{CC}	V
I_{OH}	High-level output current	V_{CC} = 1.65 V		-4	mA
		V_{CC} = 2.3 V		-12	
		V_{CC} = 2.7 V		-12	
		V_{CC} = 3 V		-24	
I_{OL}	Low-level output current	V_{CC} = 1.65 V		4	mA
		V_{CC} = 2.3 V		12	
		V_{CC} = 2.7 V		12	
		V_{CC} = 3 V		24	
$\Delta t/\Delta v$	Input transition rise or fall rate			10	ns/V
T_A	Operating free-air temperature		-40	85	°C

(1) All unused control inputs of the device must be held at V_{CC} or GND to ensure proper device operation. Refer to the TI application report, *Implications of Slow or Floating CMOS Inputs*, literature number SCBA004.

ELECTRICAL CHARACTERISTICS

over recommended operating free-air temperature range (unless otherwise noted)

PARAMETER		TEST CONDITIONS		V_{CC}	MIN	TYP(1)	MAX	UNIT
V_{OH}		I_{OH} = -100 μA		1.65 V to 3.6 V	V_{CC} - 0.2			V
		I_{OH} = -4 mA		1.65 V	1.2			
		I_{OH} = -6 mA		2.3 V	2			
		I_{OH} = -12 mA		2.3 V	1.7			
				2.7 V	2.2			
				3 V	2.4			
		I_{OH} = -24 mA		3 V	2			
V_{OL}		I_{OL} = 100 μA		1.65 V to 3.6 V			0.2	V
		I_{OL} = 4 mA		1.65 V			0.45	
		I_{OL} = 6 mA		2.3 V			0.4	
		I_{OL} = 12 mA		2.3 V			0.7	
				2.7 V			0.4	
		I_{OL} = 24 mA		3 V			0.55	
I_I		V_I = V_{CC} or GND		3.6 V			±5	μA
$I_{I(hold)}$		V_I = 0.58 V		1.65 V	25			μA
		V_I = 1.07 V		1.65 V	-25			
		V_I = 0.7 V		2.3 V	45			
		V_I = 1.7 V		2.3 V	-45			
		V_I = 0.8 V		3 V	75			
		V_I = 2 V		3 V	-75			
		V_I = 0 to 3.6 V(2)		3.6 V			±500	
I_{OZ}		V_O = V_{CC} or GND		3.6 V			±10	μA
I_{CC}		V_I = V_{CC} or GND,	I_O = 0	3.6 V			40	μA
ΔI_{CC}		One input at V_{CC} - 0.6 V,	Other inputs at V_{CC} or GND	3 V to 3.6 V			750	μA
C_i	Control inputs	V_I = V_{CC} or GND		3.3 V		3		pF
	Data inputs					6		
C_o	Outputs	V_O = V_{CC} or GND		3.3 V		7		pF

(1) All typical values are at V_{CC} = 3.3 V, T_A = 25°C.
(2) This is the bus-hold maximum dynamic current. It is the minimum overdrive current required to switch the input from one state to another.

TIMING REQUIREMENTS

over recommended operating free-air temperature range (unless otherwise noted) (see Figure 1)

		V_{CC} = 1.8 V		V_{CC} = 2.5 V ± 0.2 V		V_{CC} = 2.7 V		V_{CC} = 3.3 V ± 0.3 V		UNIT
		MIN	TYP	MIN	MAX	MIN	MAX	MIN	MAX	
f_{clock}	Clock frequency		(1)		150		150		150	MHz
t_w	Pulse duration, CLK high or low	(1)		3.3		3.3		3.3		ns
t_{su}	Setup time, data before CLK↑	(1)		2.1		2.2		1.9		ns
t_h	Hold time, data after CLK↑	(1)		0.6		0.5		0.5		ns

(1) This information was not available at the time of publication.

SWITCHING CHARACTERISTICS

over recommended operating free-air temperature range (unless otherwise noted) (see Figure 1)

PARAMETER	FROM (INPUT)	TO (OUTPUT)	V_{CC} = 1.8 V		V_{CC} = 2.5 V ± 0.2 V		V_{CC} = 2.7 V		V_{CC} = 3.3 V ± 0.3 V		UNIT
			MIN	TYP	MIN	MAX	MIN	MAX	MIN	MAX	
f_{max}			(1)		150		150		150		MHz
t_{pd}	CLK	Q		(1)	1	5.3		4.9	1	4.2	ns
t_{en}	$\overline{OE}$	Q		(1)	1	6.2		5.9	1	4.8	ns
t_{dis}	$\overline{OE}$	Q		(1)	1	5.3		4.7	1.2	4.3	ns

(1) This information was not available at the time of publication.

OPERATING CHARACTERISTICS

T_A = 25°C

PARAMETER		TEST CONDITIONS	V_{CC} = 1.8 V	V_{CC} = 2.5 V	V_{CC} = 3.3 V	UNIT
			TYP	TYP	TYP	
C_{pd} Power dissipation capacitance	Outputs enabled	C_L = 50 pF, f = 10 MHz	(1)	31	30	pF
	Outputs disabled		(1)	16	18	

(1) This information was not available at the time of publication.

PARAMETER MEASUREMENT INFORMATION

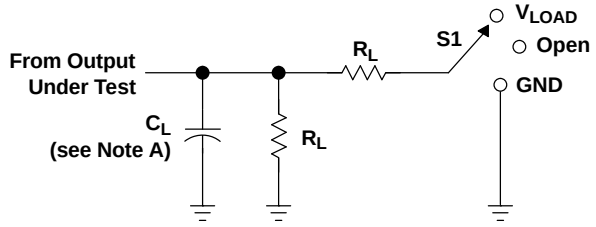

TEST	S1
t_{pd} t_{PLZ}/t_{PZL} t_{PHZ}/t_{PZH}	Open V_{LOAD} GND

LOAD CIRCUIT

V_{CC}	INPUT		V_M	V_{LOAD}	C_L	R_L	V_Δ
	V_I	t_r/t_f					
1.8 V	V_{CC}	≤2 ns	$V_{CC}/2$	$2 \times V_{CC}$	30 pF	1 kΩ	0.15 V
2.5 V ± 0.2 V	V_{CC}	≤2 ns	$V_{CC}/2$	$2 \times V_{CC}$	30 pF	500 Ω	0.15 V
2.7 V	2.7 V	≤2.5 ns	1.5 V	6 V	50 pF	500 Ω	0.3 V
3 V ± 0.3 V	2.7 V	≤2.5 ns	1.5 V	6 V	50 pF	500 Ω	0.3 V

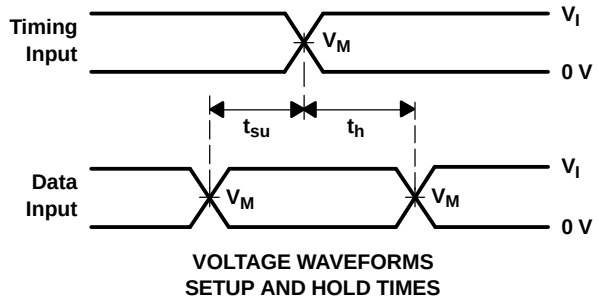

VOLTAGE WAVEFORMS
SETUP AND HOLD TIMES

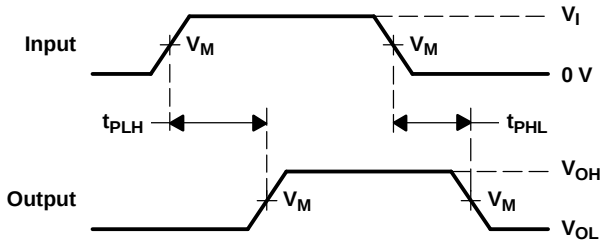

VOLTAGE WAVEFORMS
PROPAGATION DELAY TIMES

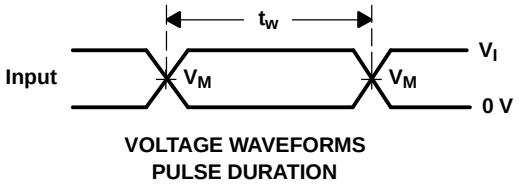

VOLTAGE WAVEFORMS
PULSE DURATION

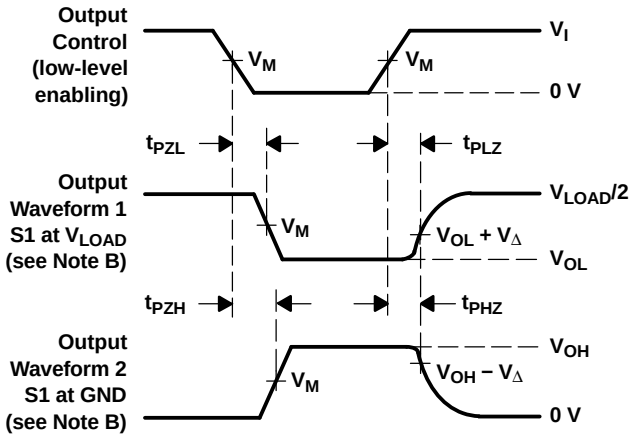

VOLTAGE WAVEFORMS
ENABLE AND DISABLE TIMES

NOTES: A. C_L includes probe and jig capacitance.
B. Waveform 1 is for an output with internal conditions such that the output is low, except when disabled by the output control. Waveform 2 is for an output with internal conditions such that the output is high, except when disabled by the output control.
C. All input pulses are supplied by generators having the following characteristics: PRR ≤ 10 MHz, Z_O = 50 Ω.
D. The outputs are measured one at a time, with one transition per measurement.
E. t_{PLZ} and t_{PHZ} are the same as t_{dis}.
F. t_{PZL} and t_{PZH} are the same as t_{en}.
G. t_{PLH} and t_{PHL} are the same as t_{pd}.
H. All parameters and waveforms are not applicable to all devices.

Figure 1. Load Circuit and Voltage Waveforms

PACKAGING INFORMATION

Orderable Device	Status (1)	Package Type	Package Drawing	Pins	Package Qty	Eco Plan (2)	Lead/ Ball Finish	MSL Peak Temp (3)	Samples (Requires Login)
74ALVCH16374DGGRE4	ACTIVE	TSSOP	DGG	48	2000	Green (RoHS & no Sb/Br)	CU NIPDAU	Level-1-260C-UNLIM	
74ALVCH16374DGGRG4	ACTIVE	TSSOP	DGG	48	2000	Green (RoHS & no Sb/Br)	CU NIPDAU	Level-1-260C-UNLIM	
74ALVCH16374DGVRE4	ACTIVE	TVSOP	DGV	48	2000	Green (RoHS & no Sb/Br)	CU NIPDAU	Level-1-260C-UNLIM	
74ALVCH16374DGVRG4	ACTIVE	TVSOP	DGV	48	2000	Green (RoHS & no Sb/Br)	CU NIPDAU	Level-1-260C-UNLIM	
74ALVCH16374DLG4	ACTIVE	SSOP	DL	48	25	Green (RoHS & no Sb/Br)	CU NIPDAU	Level-1-260C-UNLIM	
74ALVCH16374DLRG4	ACTIVE	SSOP	DL	48	1000	Green (RoHS & no Sb/Br)	CU NIPDAU	Level-1-260C-UNLIM	
74ALVCH16374ZQLR	ACTIVE	BGA MICROSTAR JUNIOR	ZQL	56	1000	Green (RoHS & no Sb/Br)	SNAGCU	Level-1-260C-UNLIM	
SN74ALVCH16374DGGR	ACTIVE	TSSOP	DGG	48	2000	Green (RoHS & no Sb/Br)	CU NIPDAU	Level-1-260C-UNLIM	
SN74ALVCH16374DGVR	ACTIVE	TVSOP	DGV	48	2000	Green (RoHS & no Sb/Br)	CU NIPDAU	Level-1-260C-UNLIM	
SN74ALVCH16374DL	ACTIVE	SSOP	DL	48	25	Green (RoHS & no Sb/Br)	CU NIPDAU	Level-1-260C-UNLIM	
SN74ALVCH16374DLR	ACTIVE	SSOP	DL	48	1000	Green (RoHS & no Sb/Br)	CU NIPDAU	Level-1-260C-UNLIM	
SN74ALVCH16374KR	LIFEBUY	BGA MICROSTAR JUNIOR	GQL	56	1000	TBD	SNPB	Level-1-240C-UNLIM	

(1) The marketing status values are defined as follows:
ACTIVE: Product device recommended for new designs.
LIFEBUY: TI has announced that the device will be discontinued, and a lifetime-buy period is in effect.
NRND: Not recommended for new designs. Device is in production to support existing customers, but TI does not recommend using this part in a new design.
PREVIEW: Device has been announced but is not in production. Samples may or may not be available.
OBSOLETE: TI has discontinued the production of the device.

(2) Eco Plan - The planned eco-friendly classification: Pb-Free (RoHS), Pb-Free (RoHS Exempt), or Green (RoHS & no Sb/Br) - please check http://www.ti.com/productcontent for the latest availability information and additional product content details.
TBD: The Pb-Free/Green conversion plan has not been defined.
Pb-Free (RoHS): TI's terms "Lead-Free" or "Pb-Free" mean semiconductor products that are compatible with the current RoHS requirements for all 6 substances, including the requirement that lead not exceed 0.1% by weight in homogeneous materials. Where designed to be soldered at high temperatures, TI Pb-Free products are suitable for use in specified lead-free processes.
Pb-Free (RoHS Exempt): This component has a RoHS exemption for either 1) lead-based flip-chip solder bumps used between the die and package, or 2) lead-based die adhesive used between the die and leadframe. The component is otherwise considered Pb-Free (RoHS compatible) as defined above.
Green (RoHS & no Sb/Br): TI defines "Green" to mean Pb-Free (RoHS compatible), and free of Bromine (Br) and Antimony (Sb) based flame retardants (Br or Sb do not exceed 0.1% by weight in homogeneous material)

(3) MSL, Peak Temp. -- The Moisture Sensitivity Level rating according to the JEDEC industry standard classifications, and peak solder temperature.

Important Information and Disclaimer: The information provided on this page represents TI's knowledge and belief as of the date that it is provided. TI bases its knowledge and belief on information provided by third parties, and makes no representation or warranty as to the accuracy of such information. Efforts are underway to better integrate information from third parties. TI has taken and continues to take reasonable steps to provide representative and accurate information but may not have conducted destructive testing or chemical analysis on incoming materials and chemicals. TI and TI suppliers consider certain information to be proprietary, and thus CAS numbers and other limited information may not be available for release.

In no event shall TI's liability arising out of such information exceed the total purchase price of the TI part(s) at issue in this document sold by TI to Customer on an annual basis.

TAPE AND REEL INFORMATION

REEL DIMENSIONS

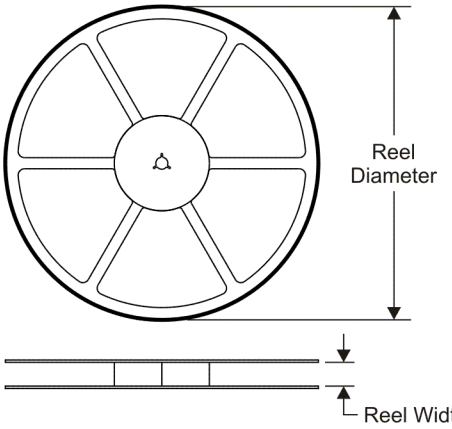

TAPE DIMENSIONS

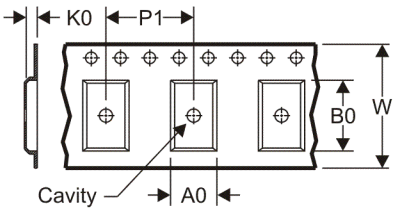

A0	Dimension designed to accommodate the component width
B0	Dimension designed to accommodate the component length
K0	Dimension designed to accommodate the component thickness
W	Overall width of the carrier tape
P1	Pitch between successive cavity centers

QUADRANT ASSIGNMENTS FOR PIN 1 ORIENTATION IN TAPE

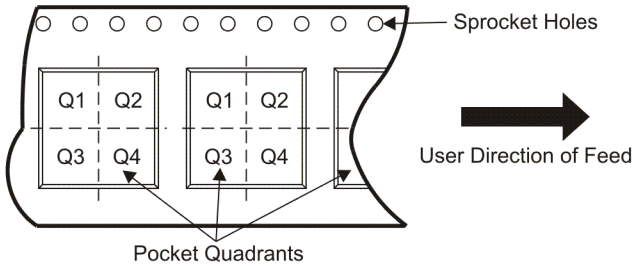

*All dimensions are nominal

Device	Package Type	Package Drawing	Pins	SPQ	Reel Diameter (mm)	Reel Width W1 (mm)	A0 (mm)	B0 (mm)	K0 (mm)	P1 (mm)	W (mm)	Pin1 Quadrant
74ALVCH16374ZQLR	BGA MICROSTAR JUNIOR	ZQL	56	1000	330.0	16.4	4.8	7.3	1.45	8.0	16.0	Q1
SN74ALVCH16374DGGR	TSSOP	DGG	48	2000	330.0	24.4	8.6	15.8	1.8	12.0	24.0	Q1
SN74ALVCH16374DGVR	TVSOP	DGV	48	2000	330.0	16.4	7.1	10.2	1.6	12.0	16.0	Q1
SN74ALVCH16374DLR	SSOP	DL	48	1000	330.0	32.4	11.35	16.2	3.1	16.0	32.0	Q1
SN74ALVCH16374KR	BGA MICROSTAR JUNIOR	GQL	56	1000	330.0	16.4	4.8	7.3	1.45	8.0	16.0	Q1

TAPE AND REEL BOX DIMENSIONS

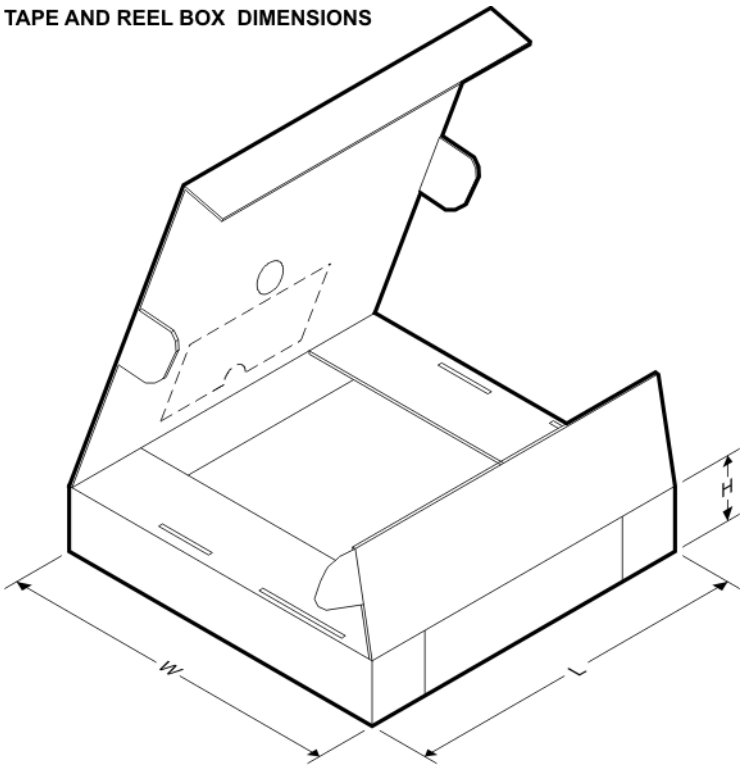

*All dimensions are nominal

Device	Package Type	Package Drawing	Pins	SPQ	Length (mm)	Width (mm)	Height (mm)
74ALVCH16374ZQLR	BGA MICROSTAR JUNIOR	ZQL	56	1000	333.2	345.9	28.6
SN74ALVCH16374DGGR	TSSOP	DGG	48	2000	346.0	346.0	41.0
SN74ALVCH16374DGVR	TVSOP	DGV	48	2000	346.0	346.0	33.0
SN74ALVCH16374DLR	SSOP	DL	48	1000	346.0	346.0	49.0
SN74ALVCH16374KR	BGA MICROSTAR JUNIOR	GQL	56	1000	333.2	345.9	28.6

ZQL (R–PBGA–N56) PLASTIC BALL GRID ARRAY

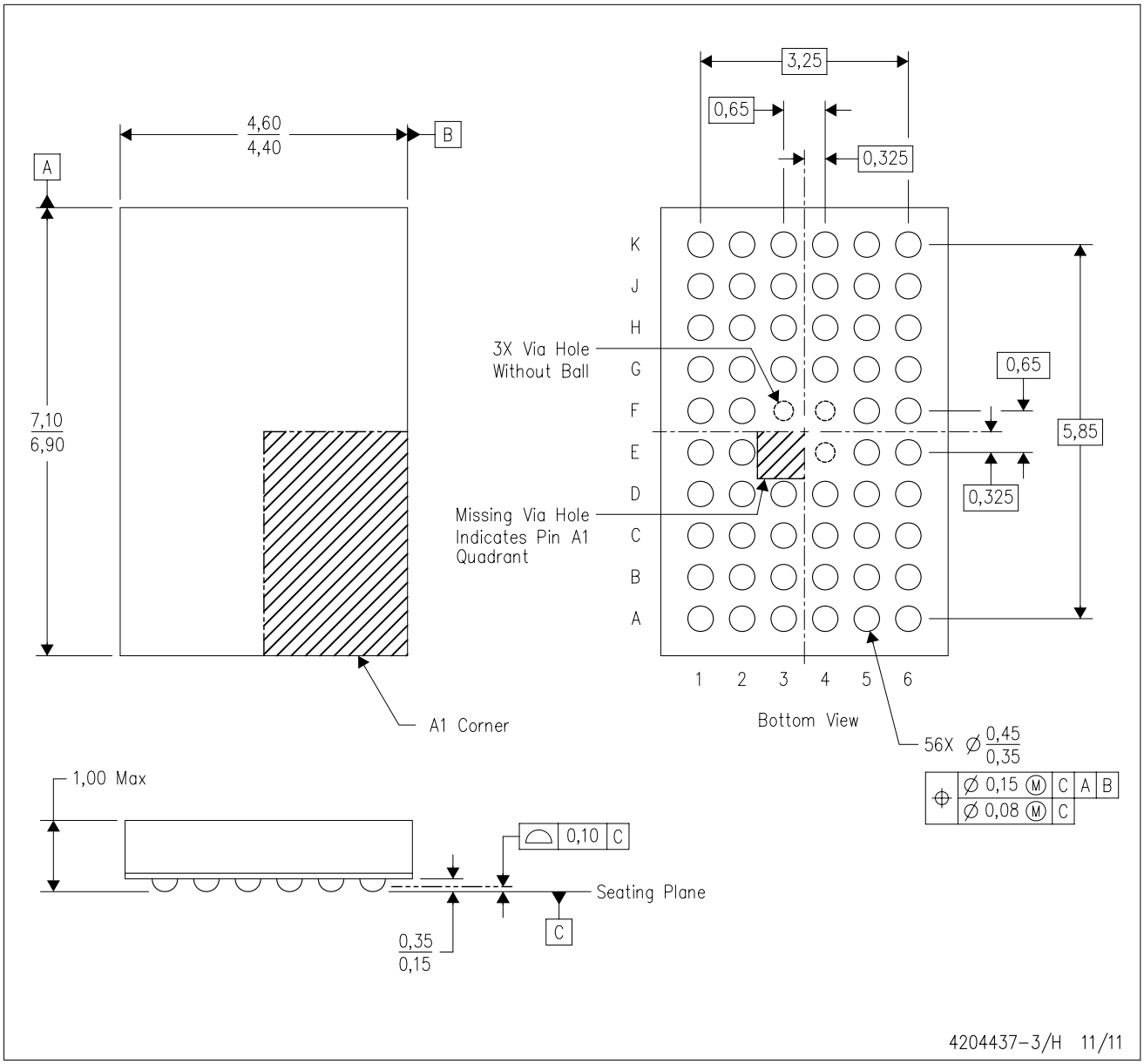

NOTES:
A. All linear dimensions are in millimeters. Dimensioning and tolerancing per ASME Y14.5M–1994.
B. This drawing is subject to change without notice.
C. Falls within JEDEC MO–285 variation BA–2.
D. This package is Pb–free. Refer to the 56 GQL package (drawing 4200583) for tin–lead (SnPb).

MicroStar Junior is a trademark of Texas Instruments

DGV (R-PDSO-G)** **PLASTIC SMALL-OUTLINE**

24 PINS SHOWN

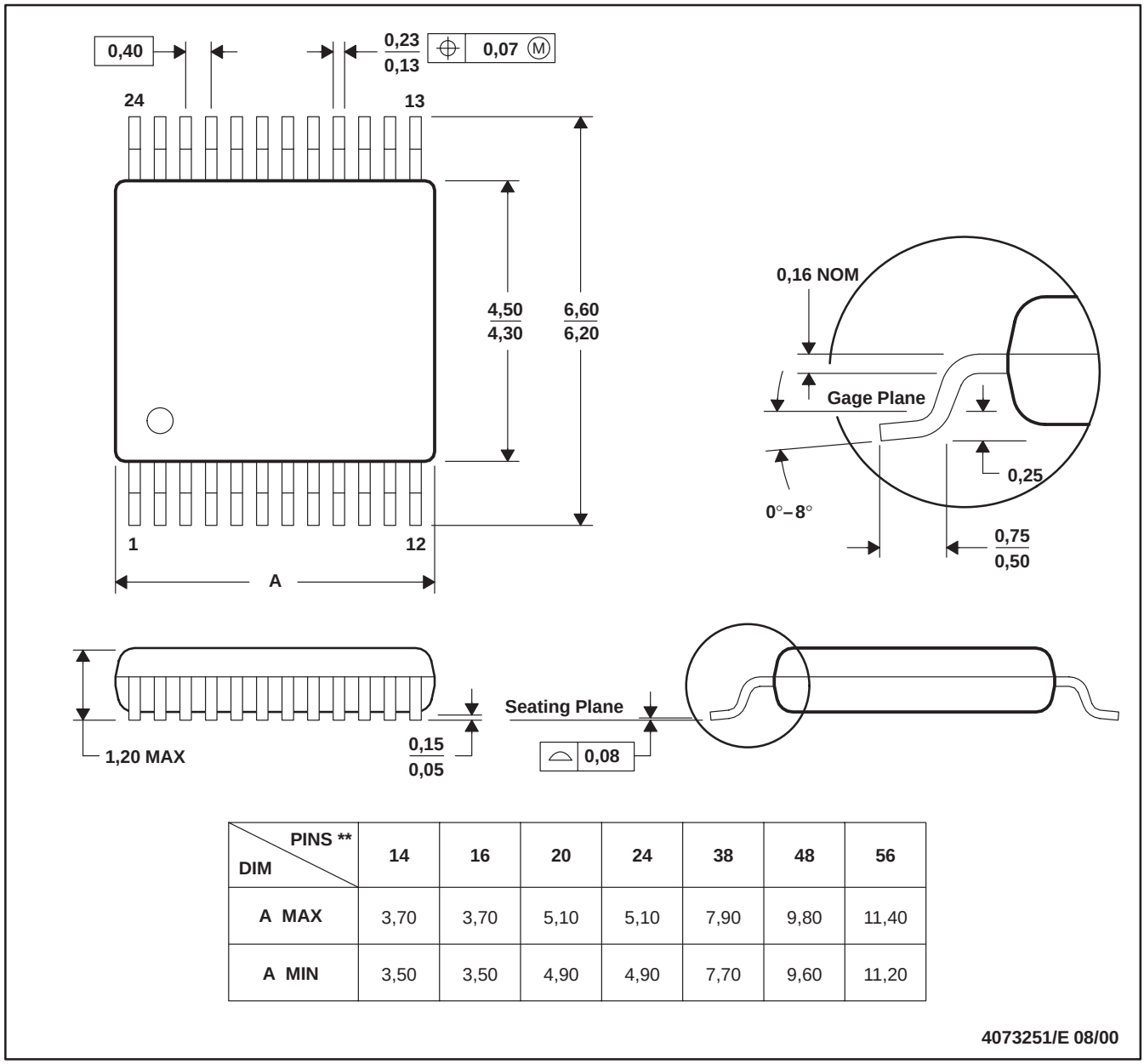

DIM \ PINS **	14	16	20	24	38	48	56
A MAX	3,70	3,70	5,10	5,10	7,90	9,80	11,40
A MIN	3,50	3,50	4,90	4,90	7,70	9,60	11,20

4073251/E 08/00

NOTES: A. All linear dimensions are in millimeters.
B. This drawing is subject to change without notice.
C. Body dimensions do not include mold flash or protrusion, not to exceed 0,15 per side.
D. Falls within JEDEC: 24/48 Pins – MO-153
14/16/20/56 Pins – MO-194

GQL (R–PBGA–N56) PLASTIC BALL GRID ARRAY

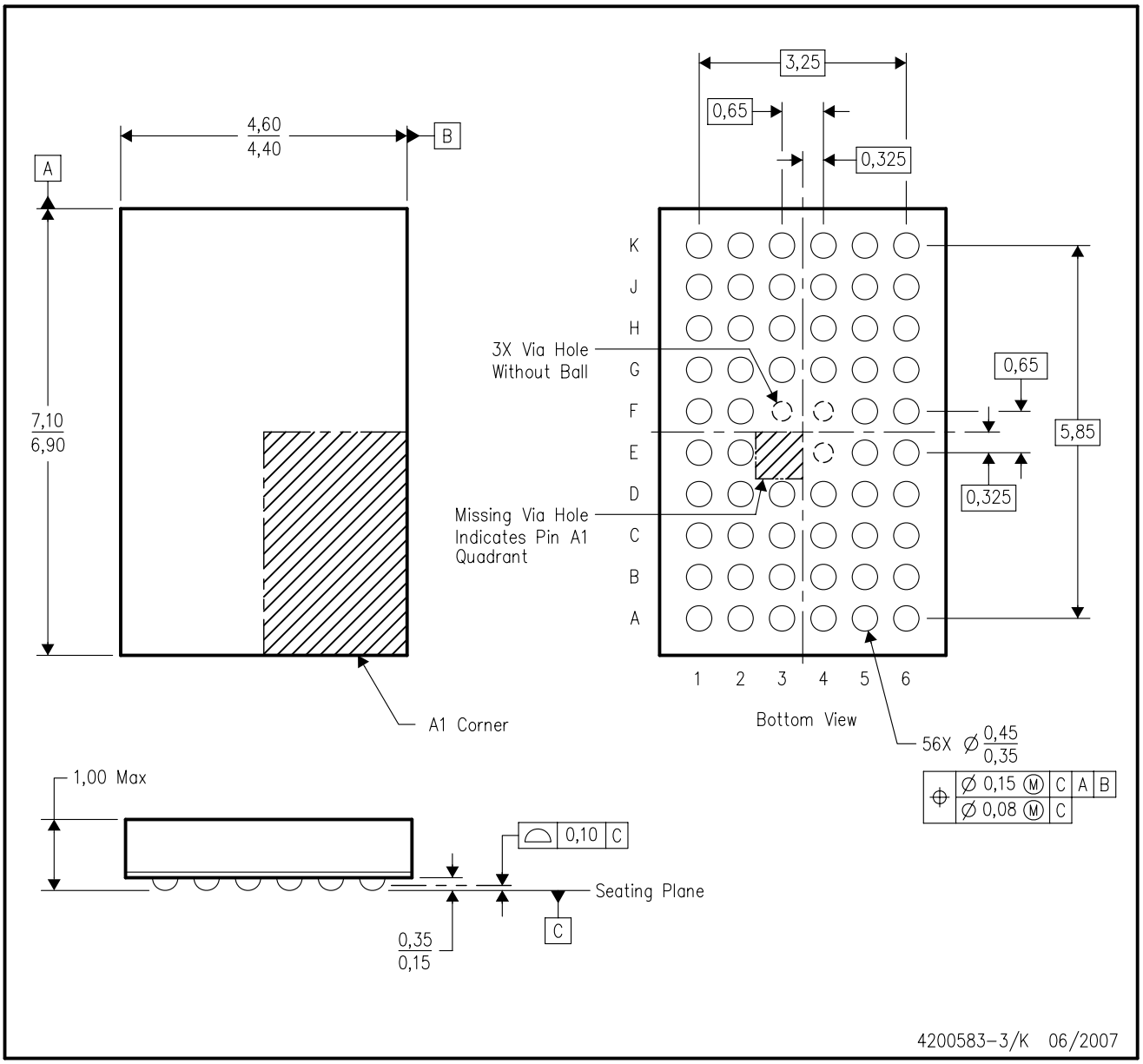

NOTES:
A. All linear dimensions are in millimeters. Dimensioning and tolerancing per ASME Y14.5M–1994.
B. This drawing is subject to change without notice.
C. Falls within JEDEC MO–285 variation BA–2.
D. This package is tin–lead (SnPb). Refer to the 56 ZQL package (drawing 4204437) for lead–free.

DL (R-PDSO-G)** **PLASTIC SMALL-OUTLINE PACKAGE**

48 PINS SHOWN

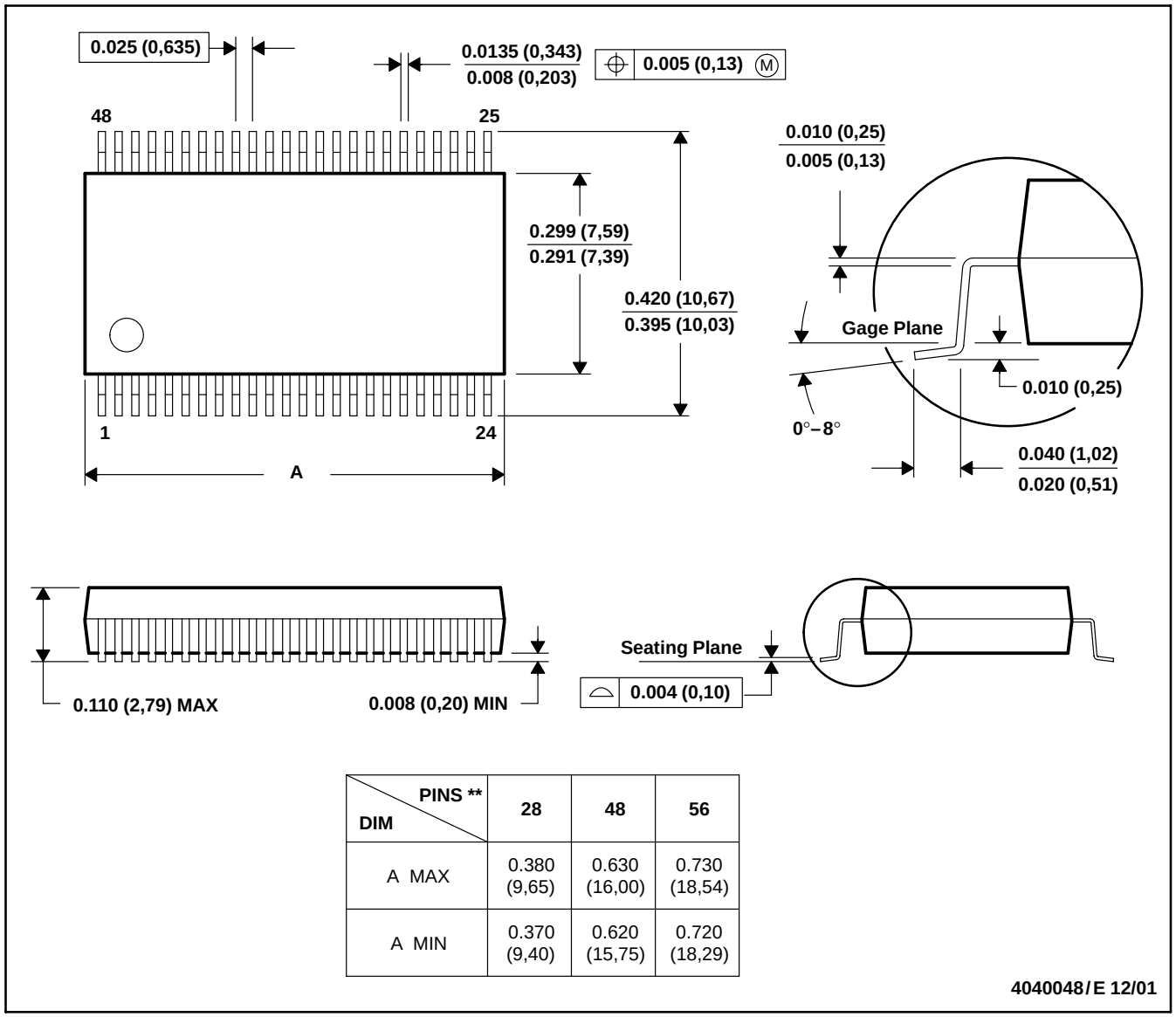

DIM \ PINS **	28	48	56
A MAX	0.380 (9,65)	0.630 (16,00)	0.730 (18,54)
A MIN	0.370 (9,40)	0.620 (15,75)	0.720 (18,29)

4040048/E 12/01

NOTES: A. All linear dimensions are in inches (millimeters).
B. This drawing is subject to change without notice.
C. Body dimensions do not include mold flash or protrusion not to exceed 0.006 (0,15).
D. Falls within JEDEC MO-118

DGG (R-PDSO-G)** **PLASTIC SMALL-OUTLINE PACKAGE**

48 PINS SHOWN

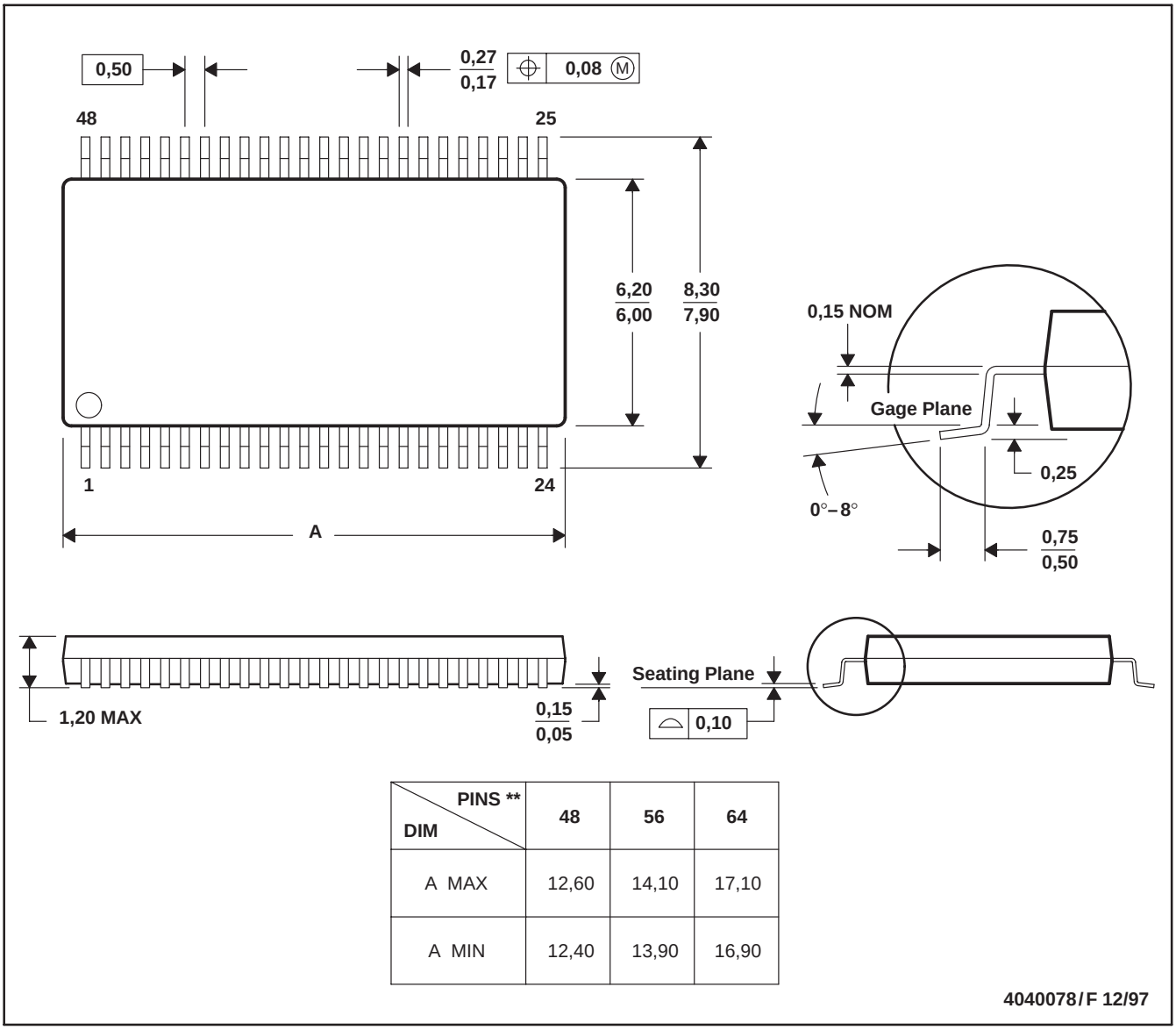

DIM \ PINS **	48	56	64
A MAX	12,60	14,10	17,10
A MIN	12,40	13,90	16,90

NOTES: A. All linear dimensions are in millimeters.
B. This drawing is subject to change without notice.
C. Body dimensions do not include mold protrusion not to exceed 0,15.
D. Falls within JEDEC MO-153

IMPORTANT NOTICE

Texas Instruments Incorporated and its subsidiaries (TI) reserve the right to make corrections, modifications, enhancements, improvements, and other changes to its products and services at any time and to discontinue any product or service without notice. Customers should obtain the latest relevant information before placing orders and should verify that such information is current and complete. All products are sold subject to TI's terms and conditions of sale supplied at the time of order acknowledgment.

TI warrants performance of its hardware products to the specifications applicable at the time of sale in accordance with TI's standard warranty. Testing and other quality control techniques are used to the extent TI deems necessary to support this warranty. Except where mandated by government requirements, testing of all parameters of each product is not necessarily performed.

TI assumes no liability for applications assistance or customer product design. Customers are responsible for their products and applications using TI components. To minimize the risks associated with customer products and applications, customers should provide adequate design and operating safeguards.

TI does not warrant or represent that any license, either express or implied, is granted under any TI patent right, copyright, mask work right, or other TI intellectual property right relating to any combination, machine, or process in which TI products or services are used. Information published by TI regarding third-party products or services does not constitute a license from TI to use such products or services or a warranty or endorsement thereof. Use of such information may require a license from a third party under the patents or other intellectual property of the third party, or a license from TI under the patents or other intellectual property of TI.

Reproduction of TI information in TI data books or data sheets is permissible only if reproduction is without alteration and is accompanied by all associated warranties, conditions, limitations, and notices. Reproduction of this information with alteration is an unfair and deceptive business practice. TI is not responsible or liable for such altered documentation. Information of third parties may be subject to additional restrictions.

Resale of TI products or services with statements different from or beyond the parameters stated by TI for that product or service voids all express and any implied warranties for the associated TI product or service and is an unfair and deceptive business practice. TI is not responsible or liable for any such statements.

TI products are not authorized for use in safety-critical applications (such as life support) where a failure of the TI product would reasonably be expected to cause severe personal injury or death, unless officers of the parties have executed an agreement specifically governing such use. Buyers represent that they have all necessary expertise in the safety and regulatory ramifications of their applications, and acknowledge and agree that they are solely responsible for all legal, regulatory and safety-related requirements concerning their products and any use of TI products in such safety-critical applications, notwithstanding any applications-related information or support that may be provided by TI. Further, Buyers must fully indemnify TI and its representatives against any damages arising out of the use of TI products in such safety-critical applications.

TI products are neither designed nor intended for use in military/aerospace applications or environments unless the TI products are specifically designated by TI as military-grade or "enhanced plastic." Only products designated by TI as military-grade meet military specifications. Buyers acknowledge and agree that any such use of TI products which TI has not designated as military-grade is solely at the Buyer's risk, and that they are solely responsible for compliance with all legal and regulatory requirements in connection with such use.

TI products are neither designed nor intended for use in automotive applications or environments unless the specific TI products are designated by TI as compliant with ISO/TS 16949 requirements. Buyers acknowledge and agree that, if they use any non-designated products in automotive applications, TI will not be responsible for any failure to meet such requirements.

Following are URLs where you can obtain information on other Texas Instruments products and application solutions:

Products		**Applications**	
Audio	www.ti.com/audio	Automotive and Transportation	www.ti.com/automotive
Amplifiers	amplifier.ti.com	Communications and Telecom	www.ti.com/communications
Data Converters	dataconverter.ti.com	Computers and Peripherals	www.ti.com/computers
DLP® Products	www.dlp.com	Consumer Electronics	www.ti.com/consumer-apps
DSP	dsp.ti.com	Energy and Lighting	www.ti.com/energy
Clocks and Timers	www.ti.com/clocks	Industrial	www.ti.com/industrial
Interface	interface.ti.com	Medical	www.ti.com/medical
Logic	logic.ti.com	Security	www.ti.com/security
Power Mgmt	power.ti.com	Space, Avionics and Defense	www.ti.com/space-avionics-defense
Microcontrollers	microcontroller.ti.com	Video and Imaging	www.ti.com/video
RFID	www.ti-rfid.com		
OMAP Mobile Processors	www.ti.com/omap		
Wireless Connectivity	www.ti.com/wirelessconnectivity		
	TI E2E Community Home Page		e2e.ti.com

Mailing Address: Texas Instruments, Post Office Box 655303, Dallas, Texas 75265
Copyright © 2012, Texas Instruments Incorporated